HCM FILTERS VHF RESONATOR TYPE FILTERS

Type	Center frequency (MHz)	No. of pole	Passband (dB)	Passband (kHz)	Stopband (dB)	Stopband (kHz)	Max. ripple (dB)	Max. loss (dB)	Guaranteed attenuation (dB)	Guaranteed attenuation (kHz)	Terminating impedance Zt (Ω//pF)	Coupling impedance Zc (pF)	Case
55E2B3	55.025	4	3	±7.5	30	±25	1.0	3.0	80	–910	4.0k//–0.7	–0.9	UM-1S x 2
58F2B13	58.1125	4	3	±8.5	30	±25	2.0	3.0	80	–910	3.0k//–1.0	–0.5	UM-1S x 2
70E1B	70	2	3	±7.5	18	±28	1.0	2.0	35 35	+500 to +1000 –200 to –1000	2.0k//–0.9	–	UM-1S
70E1D	70	2	3	±10.0	15	±30	1.0	2.0	35 35	+500 to +1000 –200 to –1000	2.5k//–1.0	–	UM-1S
70E2B2	70	4	3	±7.5	30	±25	1.0	3.0	70 75	+500 to +1000 –200 to –1000	2.0k//–0.4	–0.5	(UM-1S) x 2
70E2D2	70	4	3	±10.0	35	±40	1.0	3.0	70 75	+500 to +1000 –200 to –1000	2.5k//–0.8	–1.0	(UM-1S) x 2
90E1B	90	2	3	±7.5	18	±28	1.0	2.0	35 35	+500 to +1000 –200 to –1000	2.0k//–0.1	–	UM-1S
90E1D	90	2	3	±10.0	15	±30	1.0	2.0	35 35	+500 to +1000 –200 to –1000	2.5k//–0.4	–	UM-1S
90E2B2	90	4	3	±7.5	30	±25	1.0	3.0	70 75	+500 to +1000 –200 to –1000	2.0k//–0.5	–0.3	(UM-1S) x 2
90E2D2	90	4	3	±10.0	35	±40	1.0	3.0	70 75	+500 to +1000 –200 to –1000	3.0k//–0.6	–0.8	(UM-1S) x 2

Outline drawing: See page 40

Operating temperature range: –30°C to +80°C

Electrical data

55E2B3

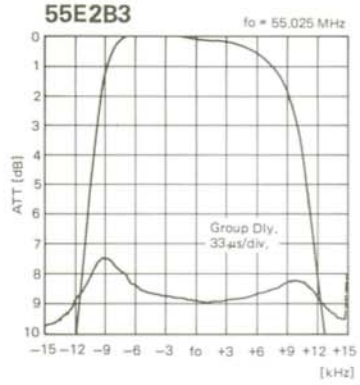

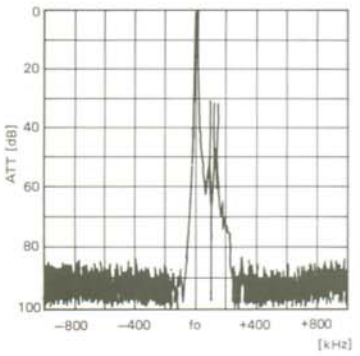

70E1B

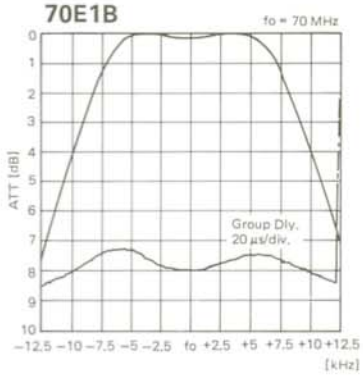

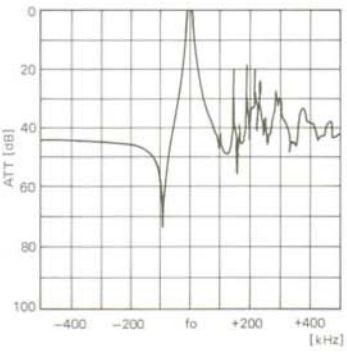

90E2D2

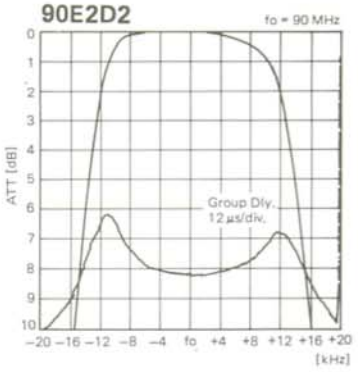

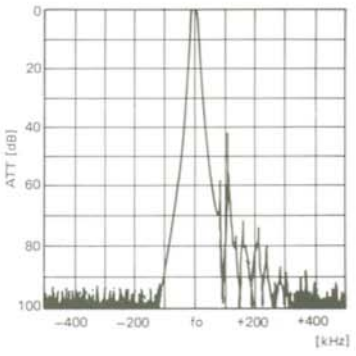

Crystal Filters

HCM FILTERS Outline Drawing

in mm (in inch)

UM-4S

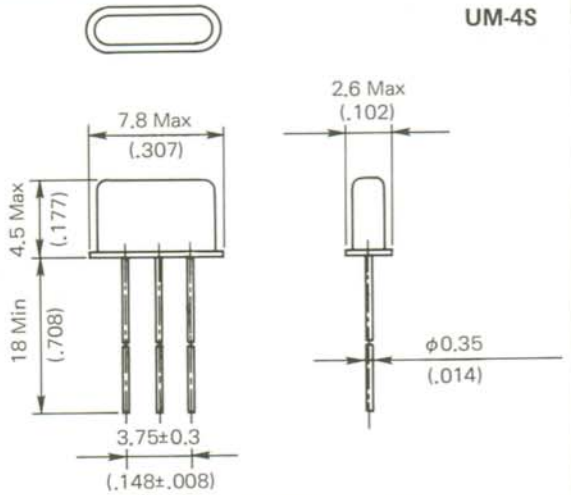

UM-1S

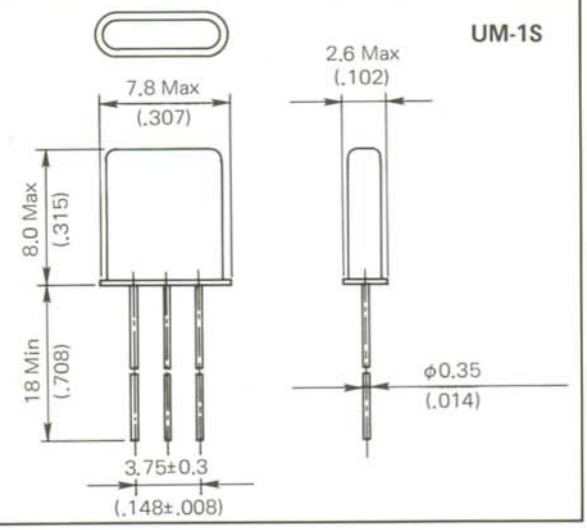

HC-49/U

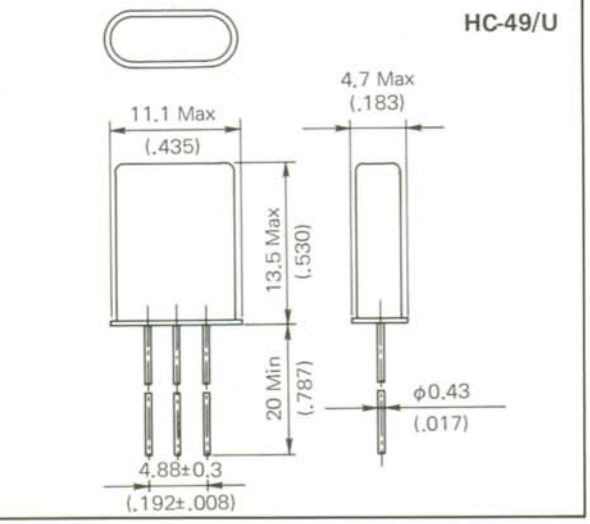

S-428

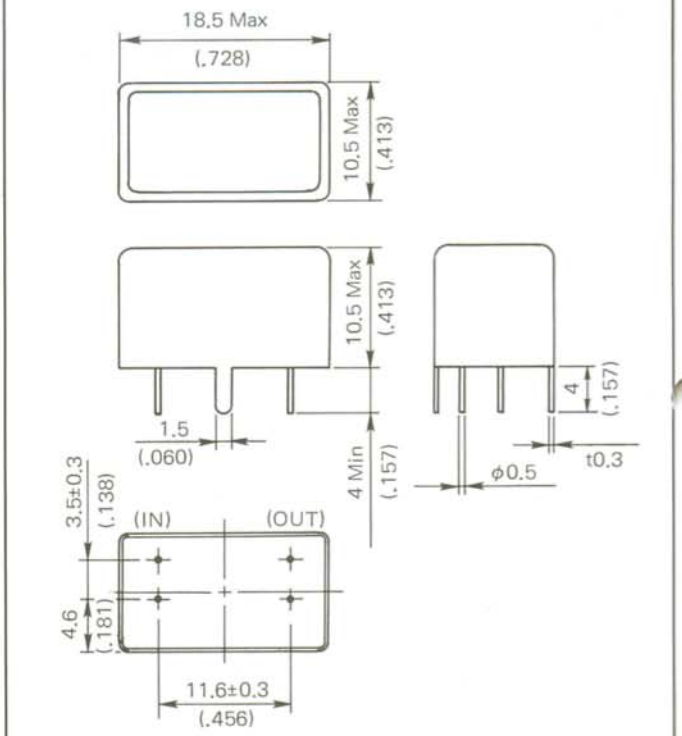

Non-washable
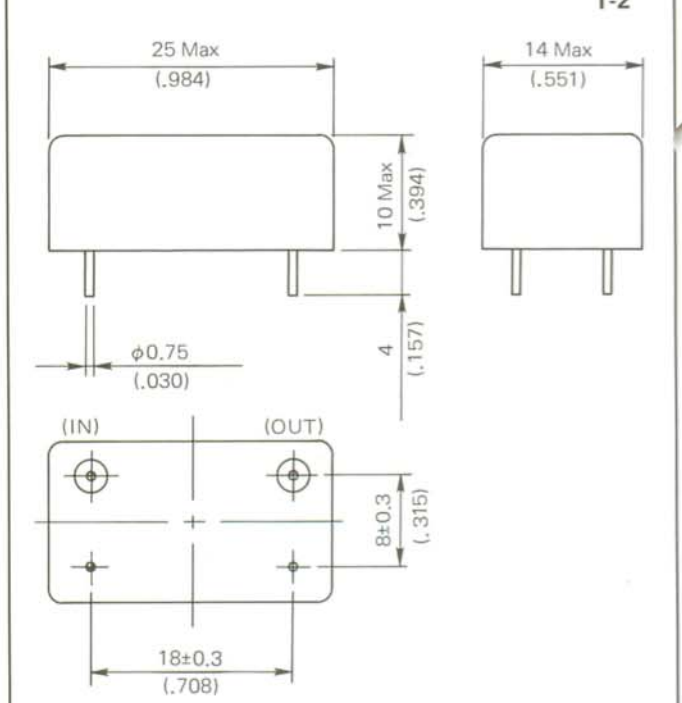
T-2